SIDE VIEW

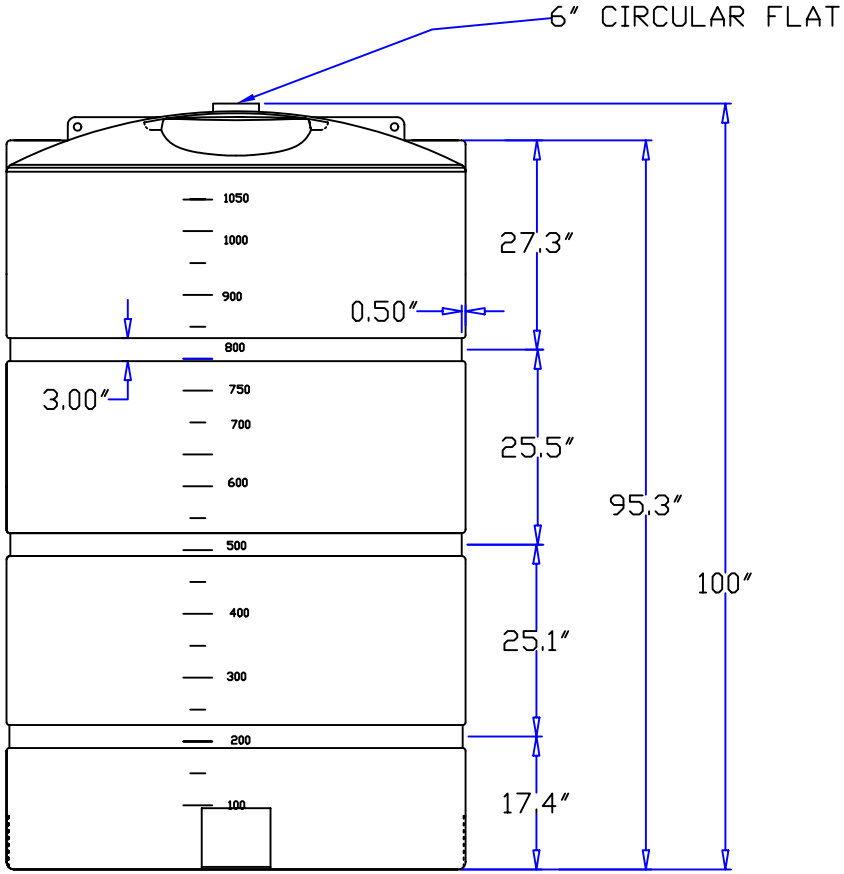

TOP VIEW

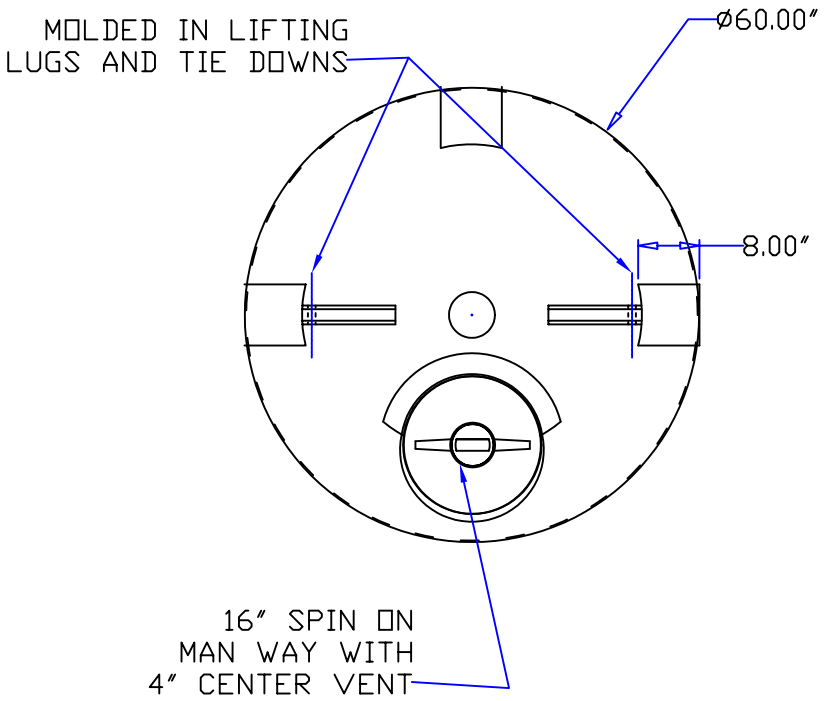

REV	DESCRIPTION	DATE	APPRD

DRAWN / DATE: MSYKES/5/14/02

APPRD. / DATE:

MATERIAL / SHOT WEIGHT: HDPE — 285 LBS.

ALL DIMENSIONS ARE IN DECIMAL INCHES
TOLERANCES UNLESS OTHERWISE SPECIFIED
± .5% @ 68° F

THIRD ANGLE PROJECTION
ANSI 14.5M

NOTES:

BAILIFF ENTERPRISES, INC.
8423 AIRLINE DRIVE, HOUSTON, TEXAS 77037
PHONE (281) 447-5372 FAX (281) 999-1223

CLIENT / DESCRIPTION: 1100 GALLON VERTICAL TANK

SCALE: N.S.

PART NO.: VTB1100-60